Roll No. | | | | | | | | |

B.E. / B.Tech (Full Time) End Semester DEGREE EXAMINATION, NOV / DEC 2011

First Semester

Common to All Branches

GE 171 – ENGINEERING GRAPHICS

(Regulation 2002 / 2004)

Time : 3 Hours | Answer ALL Questions | Max. Marks 100

PART-A (5 x 20 = 100 Marks)

1. Draw the three views of the object shown in the figure. A.

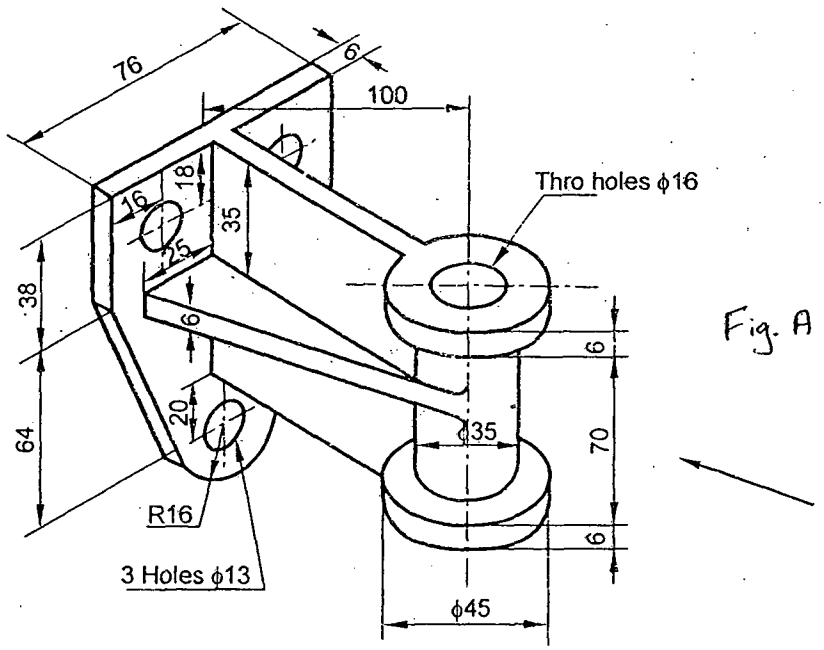

Fig. A

2. a) Draw the projections of a straight line AB of 100 mm long when one of its ends is touching the HP. The angle of inclination with HP and VP are 40° & 50° respectively.

OR

b) A circular lamina of diameter 40 mm rests with one of its points on the circumference on HP. A triangular hole of side 25 mm is at the centre with one of its sides perpendicular to VP. Draw its projections when the lamina is at 45° to HP.

3. a) A cone of 25 mm radius and 70 mm height rates on the ground on one of its base circle points such that the apex is 20 mm and the nearest base circle points is 50 mm infront of VP and the base is perpendicular to HP. Draw the projection.

OR

b) A tetrahedran of side 40 mm is resting on VP on one of its edges with the face containing that edge is perpendicular to both HP and VP. Draw its projections.

4. a) A square pyramid of base side 35 mm and axis length 60 mm is resting on HP with a side of base inclined at 30° to VP. It is cut by a plane perpendicular, to both plane, 10 mm away from the axis. Draw top view, front view and sectional top view.

OR

b) Draw the development of the cylinder shown in figure. B.

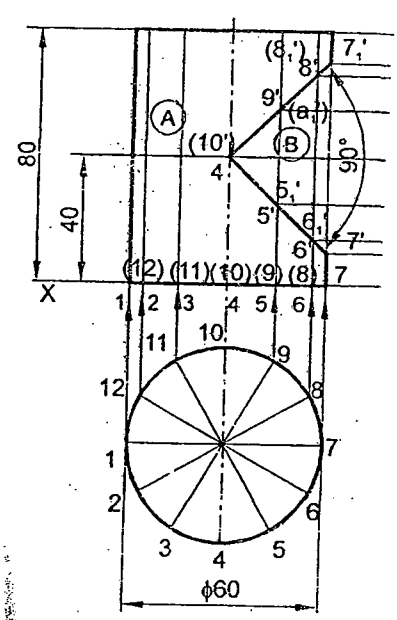

Fig. B

5. a) A frustum of a cone having 25 mm as top diameter 50 mm as bottom diameter and 50 mm axis length is placed vertically on a cylindrical block of 75 mm diameter and is 25 mm thick such that both the solids have the common axis. Draw the isometric projection of the combination of these solids.

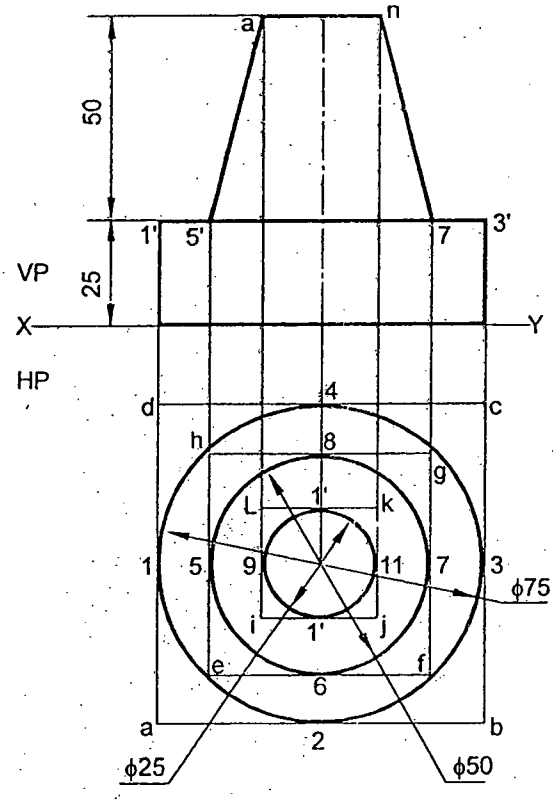

Fig. C

OR

b) A frustum of square pyramid of base edge 26 mm and top edge 20mm. The height of the frustum is 35 mm. It rests on its base on the ground with the base edges equally inclined to the PP. The axis of the frustum is 30 mm to the right of eye. The eye is 45 mm is front of the PP and 50 mm above the ground. The nearest base corner is 10 mm behind the PP. Draw the perspective projection of the frustum.